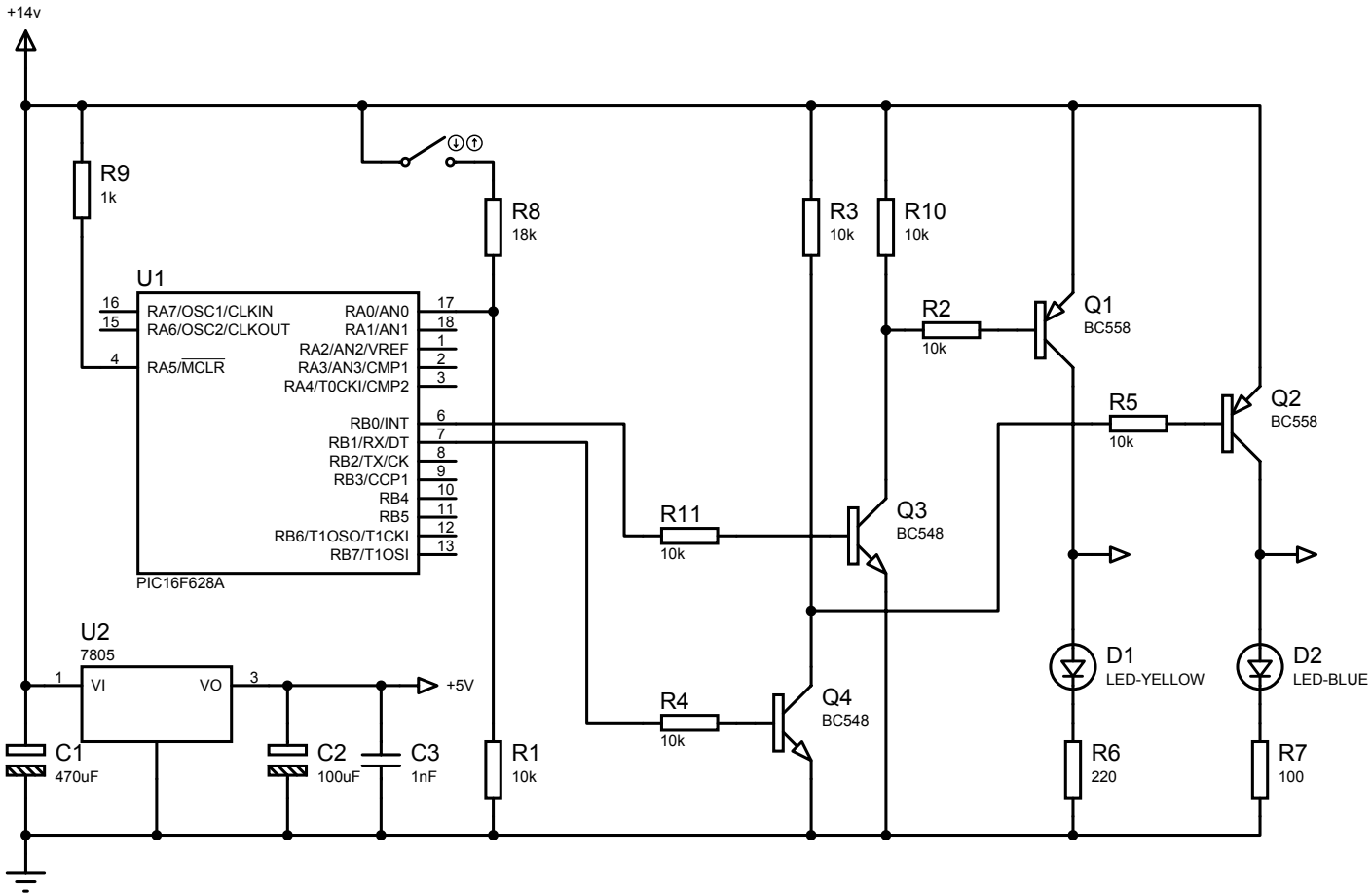
+14v
R9
1k
R8
18k
R3
10k
R10
10k
U1
16
15
4
RA7/OSC1/CLKIN
RA6/OSC2/CLKOUT
RA5/MCLR
RA0/AN0
RA1/AN1
RA2/AN2/VREF
RA3/AN3/CMP1
RA4/T0CKI/CMP2
RB0/INT
RB1/RX/DT
RB2/TX/CK
RB3/CCP1
RB4
RB5
RB6/T1OSO/T1CKI
RB7/T1OSI
17
18
1
2
3
6
7
8
9
10
11
12
13
PIC16F628A
R2
10k
Q1
BC558
R5
10k
Q2
BC558
R11
10k
Q3
BC548
U2
7805
1
VI
VO
3
+5V
R4
10k
Q4
BC548
D1
LED-YELLOW
D2
LED-BLUE
C1
470uF
C2
100uF
C3
1nF
R1
10k
R6
220
R7
100